15” S-Series HMI - R15IB3S-PCC3-PoE

Features

- 15” 1024 x 768 Resolution with Projected Capacitive Multi-Touch (P-CAP)
- Low-Power System with Intel® Celeron® N2930 Processor
- Fanless Cooling System and Ultra-low Power Consumption
- Dual Gigabit Ethernet
- Front IP65 Water and Dust Proof
- Support PoE function
- Room Booking Schedule, Access Control, Room Information Display

PoE

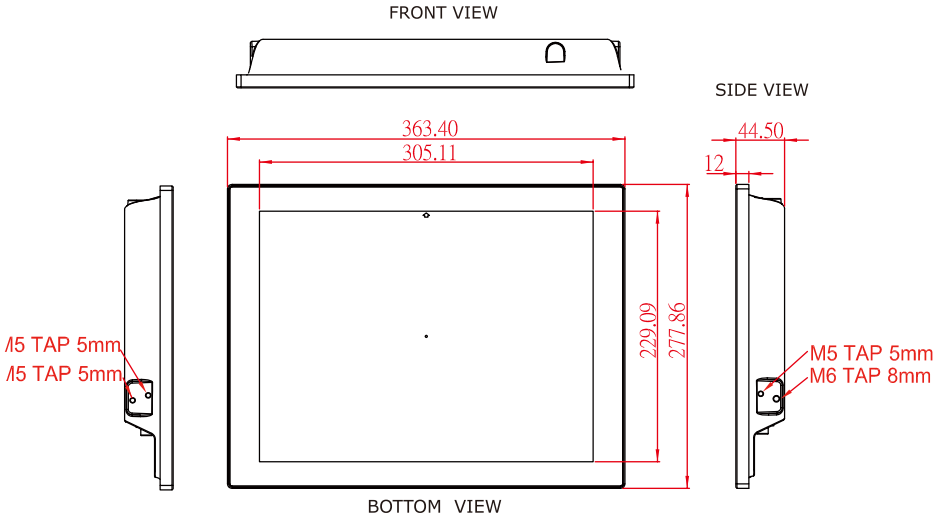

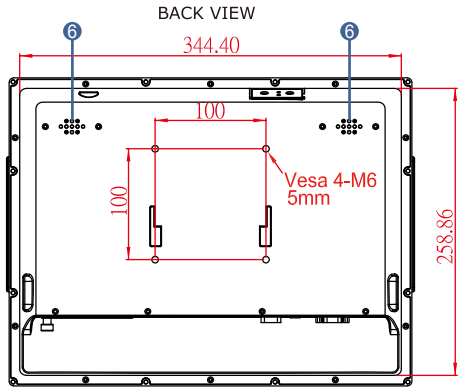

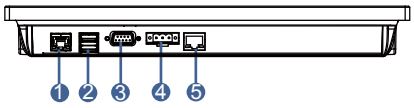

1. RJ-45 (LAN)
2. USB 2.0/USB 3.0
3. RS232/422/485
4. 12V DC Terminal Block
5. RJ-45 (LAN/PoE)
6. 1 Watt Speaker x 2

Specifications

System :

• Processor	: Intel® Celeron® Bay Trail-M N2930 1.83GHz
• Memory	: 8GB DDR3L-1600 SODIMM,
• Storage	: 64GB M.2 SSD
• System Chipset	: Intel® ATOM SoC Integrated
• LAN	: Dual Intel® I210-AT GbE LAN

Display Specification :

• Size/ Type	: 15” TFT(LED Back Light)
• Resolution (pixels)	: 1024 x 768
• Brightness (cd/m2)	: 250 cd/m2
• Touch screen	: Projected Capacitive Multi-Touch (P-CAP)
	: Optional anti-glare coating

Input / Output

• Serial Ports	: RS232/422/485
• USB Ports	: 1 x USB 3.0 1 x USB 2.0
• Ethernet	: 1 x RJ 45-10/100/1000 Mbps (LAN) 1 x RJ45 (PoE)
• DIDO	: 1 x DIDO (Optional)

Power

• Power Input	: 12V DC-in
• Power over Ethernet	: Power Device (PD) follows IEEE 802.3at (25 W) *PoE support condition: used without other power-consuming devices*
• Power consumption	: 23W

Mechanical Specification :

• Cooling System	: Fanless design
• Mounting	: VESA Mount(100x100mm), Panel Mount, Front Side Wall Mount
• Dimension (W x H x D)	: 363.40 x 277.86 x 44.50 (mm)

Environment :

• Operating Temperature	: 0 ºC to 50 ºC
• Humidity	: 10% to 90% non-condensing
• IP Rating	: Front IP65

OS BSP Driver Support :

• Operating System	: Windows 10 IoT Enterprise

CE FC RoHS COMPLIANT 2011/65/EU

Note: All Specifications are subject to change without prior notice!

Revised date: 28-May-2019 V2.1